mesoS-13

THIS DRAWING AND ALL DATA INCLUDED IS THE PROPERTY OF APPLIED SCIENTIFIC INSTRUMENTATION AND THE INFORMATION CONTAINED HEREIN IS FOR GENERAL PRESENTATION PURPOSES ONLY AND MAY CHANGE AT ANY TIME. CONTACT ASI OR A FACTORY REPRESENTATIVE FOR PROJECT SPECIFIC ENGINEERING.

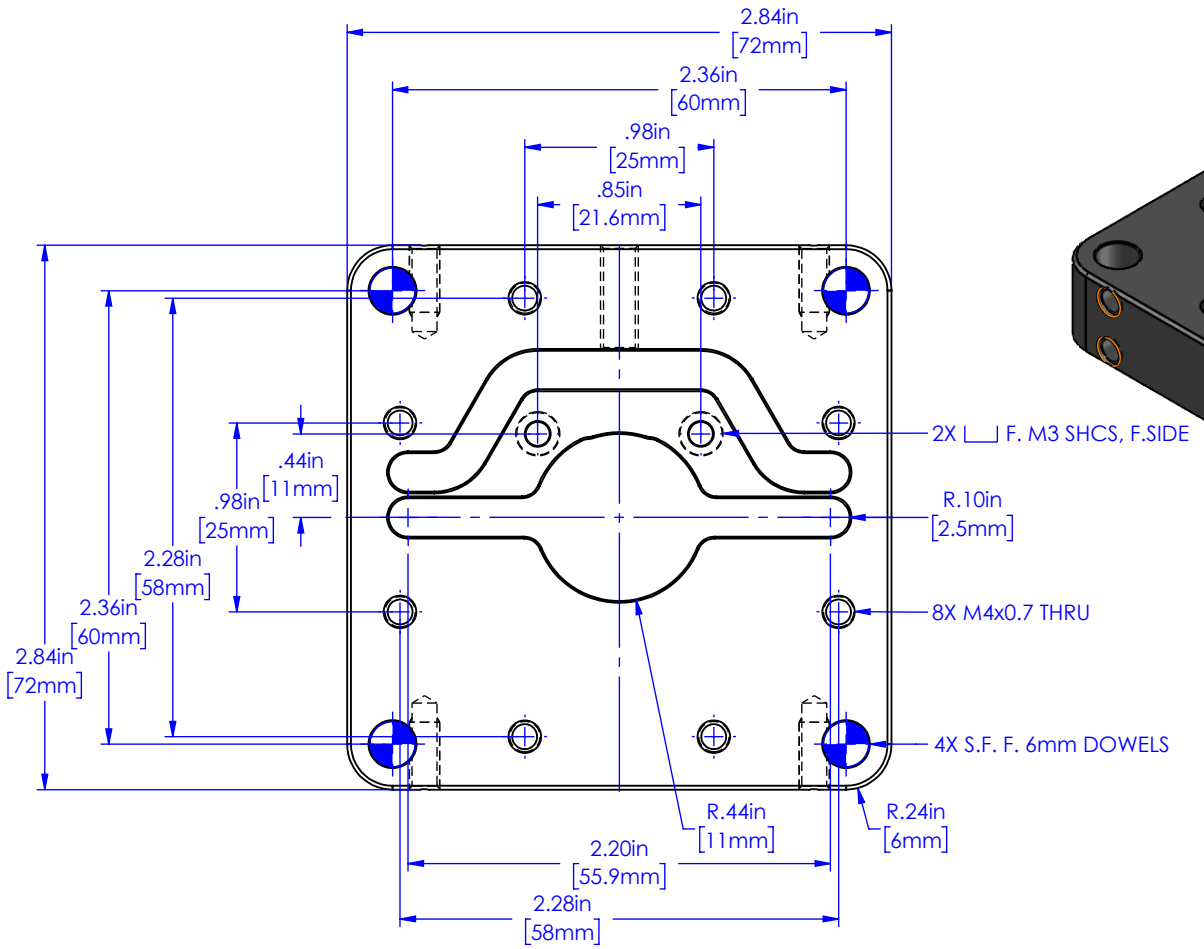

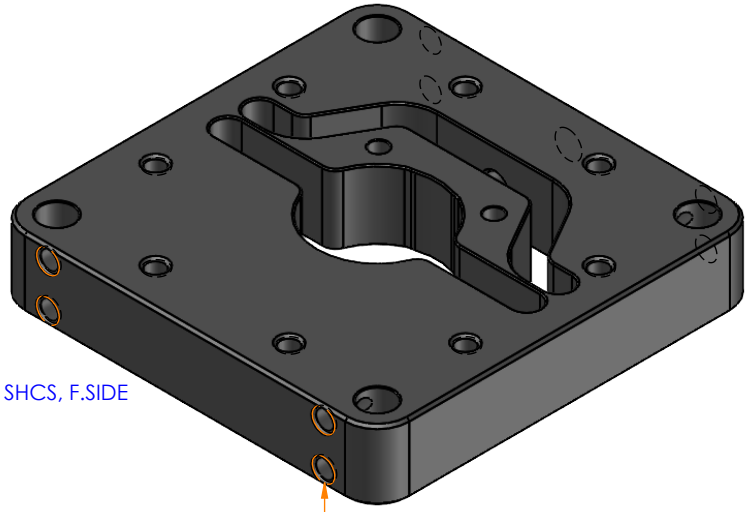

8X M4x0.7 TAPPED HOLES,
FOR 6mm DOWEL HOLDING SCREWS
(BOTH SIDES) *USE 2mm ALLEN WRENCH

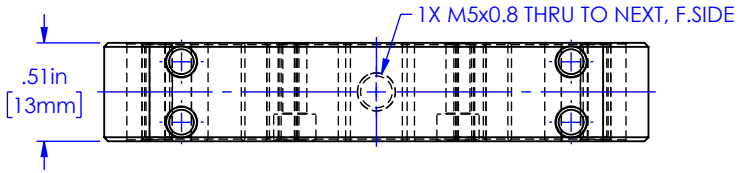

PROPRIETARY AND CONFIDENTIAL THE INFORMATION CONTAINED IN THIS DRAWING IS THE SOLE PROPERTY OF APPLIED SCIENTIFIC INSTRUMENTATION. ANY REPRODUCTION IN PART OR AS A WHOLE WITHOUT THE WRITTEN PERMISSION OF APPLIED SCIENTIFIC INSTRUMENTATION IS PROHIBITED.	APPLIED SCIENTIFIC INSTRUMENTATION 29391 W ENID RD EUGENE, OR 97402-9533 PHONE: (541)461-8181 FAX: (541)461-4018		UNLESS OTHERWISE SPECIFIED DIMENSIONS ARE IN INCHES .xx ± .01 .xxx ± .005 .xxxx ± .0002 FRACTIONS ± 1/32 ANGLES ± 1°		**DESCRIPTION** mesoSPIM QS15-MOUNT	
	DRAWN BY/DATE M.ANTHONY 11/13/23	**CHECKED BY/DATE** V.MARSO 11/13/23	**SCALE** 1:1	**REV** -	**MATERIAL** 6061, ANODIZED BLK	**DRAWING #** mesoS-13

5 4 3 2 1